EST. 1969
SWS
WARNING LIGHTS INC.

NEW TITAN SERIES - TRAFFIC ARROW

Page 30 of 2017 Catalogue

Part #	Vdc	Amps	# of Modules in Shaft	# of Modules per Arm	Flash Patterns	Length	Height
57748-2	12	3.3A	8	2	7	50″	22″

Features

- The hermetically sealed light-head will not be affected by outside factors such as temperature and humidity
- NO DOWN TIME – heads are field replaceable in less than one minute!
- SWS's pressure clip system ensure that no special tools are ever required
- A choice of control platforms – cab-mounted slim-line control box or NEW outdoor rated switch box
- All electrical connections are made using the industry known and trusted, DTM series connections from TE
- Adapter kit available for use on existing wire installations (77280)
- Stop-Turn lighting kits available (96050)
- **5 Year Warranty (Control box 1 Year Warranty)**

Dimensions

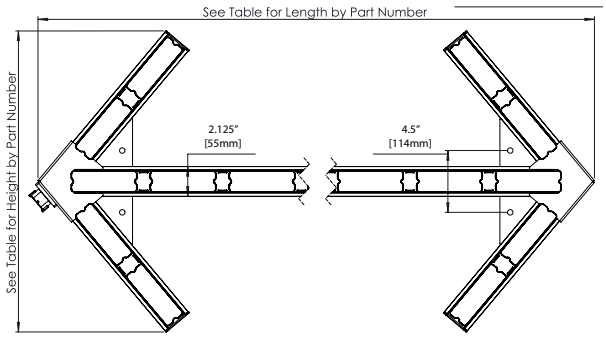

Control Box & Cable Options *(sold separately)*

77501

Main Power Cable
To be used with 77501
20′ - 77260
30′ - 77261
40′ - 77262
50′ - 77263

77504 Outdoor Rated Switch Box

Main Power Cable
To be used with 77504
10′ - 77270
20′ - 77271
30′ - 77272
40′ - 77273

96050
Stop Turn Kit
(sold separately)